POLOTSK STATE UNIVERSITY

DEPARTMENT OF TECHNOLOGY AND EQUIPMENT OF MACHINE-BUILDING INDUSTRY

BASICS OF SOLIDWORKS

GUIDELINES
for practical work on the course « Technical and Computer Drawing » for foreign students

A.Maksimchuk

Novopolotsk, 2018

Contents

About course

Goals of course: To develop spatial imagination and graphic modeling skills; to give knowledge about graphic design and develop drawing_s reading skills; to develop thinking by knowing geometrical forms of an object; to develop specialty creativity; to give basic knowledge for the use of computer aided design programs and the acquisition of right ways for composing technical drawings of plane and three-dimensional objects; to teach the of use regulative documents and reference books.

Study results: On the module completion the student can use logical and analytical thinking and systematic approach in solving spatial geometric tasks by images /drawings; can link descriptive geometry with other subjects and in describing and analysing of surrounding environment; can use rational working methods in graphic designing; can use specialized reference books and literature; is able to analyse and simulate spatial-volume shapes existing in artificial world and nature; can adequately assess his abilities and skills in engineering graphics and confidently apply them; knows the techniques for the application of computer aided design programs.

Total hours of practical work: 9 hours.

Introduction

Hours of work: 60 min.

About Solidworks

SolidWorks (SW) is a 3D solid modeling package which allows users to develop full solid models in a simulated environment for both design and analysis. In SolidWorks, you sketch ideas and experiment with different designs to create 3D models.

SolidWorks is used by students, designers, engineers, and other professionals to produce simple and complex parts, assemblies, and drawings. Designing in a modeling package such as SolidWorks is beneficial because it saves time, effort, and money that would otherwise be spent prototyping the design.

SolidWorks Fundamentals

Concepts

Parts are the basic building blocks in the SolidWorks software. Assemblies contain parts or other assemblies, called subassemblies. A SolidWorks model consists of 3D geometry that defines its edges, faces, and surfaces. The SolidWorks software lets you design models quickly and precisely. SolidWorks models are:

- Defined by 3D design (SolidWorks uses a 3D design approach. As you design a part, from the initial sketch to the final result, you create a 3D model. From this model, you can create 2D drawings or mate components consisting of parts or subassemblies to create 3D assemblies. You can also create 2D drawings of 3D assemblies. When designing a model using SolidWorks, you can visualize it in three dimensions, the way the model exists once it is manufactured)
- Based on components (One of the most powerful features in the SolidWorks application is that any change you make to a part is reflected in all associated drawings or assemblies.)

Terminology

These terms appear throughout the SolidWorks software and documentation.

Origin Appears as two blue arrows and represents the (0,0,0) coordinate of the model. When a sketch is active, a sketch origin appears in red and represents the (0,0,0) coordinate of the sketch. You can add dimensions and relations to a *model* origin, but not to a sketch origin.

Plane Flat construction geometry. You can use planes for adding a 2D sketch, section view of a model, or a neutral plane in a draft feature, for example.

Axis Straight line used to create model geometry, features, or patterns. You can create an axis in different ways, including intersecting two planes.

The SolidWorks application creates temporary axes implicitly for every conical or cylindrical face in a model.

Face Boundaries that help define the shape of a model or a surface. A face is a selectable area (planar or nonplanar) of a model or surface. For example, a rectangular solid has six faces.

Edge Location where two or more faces intersect and are joined together. You can select edges for sketching and dimensioning, for example.

Vertex Point at which two or more lines or edges intersect. You can select vertices for sketching and dimensioning, for example.

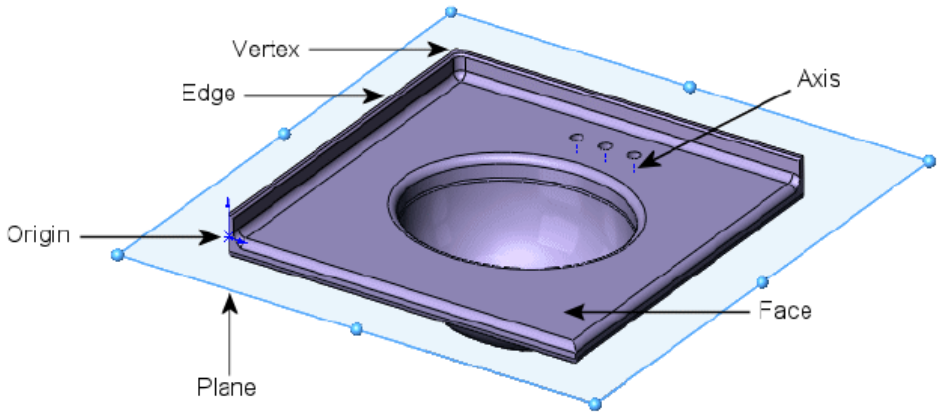

User Interface

The SolidWorks application includes user interface tools and capabilities to help you create and edit models efficiently, including:

Windows Functions. The SolidWorks application includes familiar Windows functions, such as dragging and resizing windows. Many of the same icons, such as print, open, save, cut, and paste are also part of the SolidWorks application.

SolidWorks Document Windows. SolidWorks document windows have two panels. The left panel, or Manager Pane, contains:

FeatureManager design tree Displays the structure of the part, assembly, or drawing. Select an item from the FeatureManager design tree to edit the underlying sketch, edit the feature, and suppress and unsuppress the feature or component, for example.

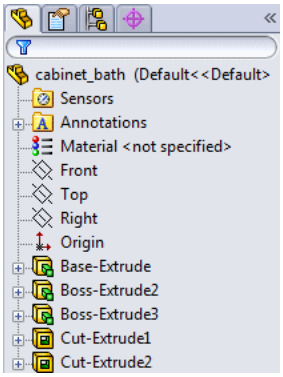

PropertyManager Provides settings for many functions such as sketches, fillet features, and assembly mates.

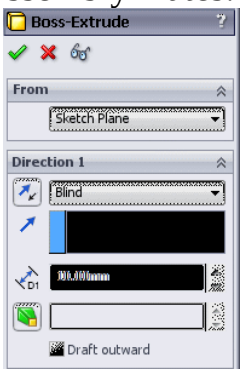

ConfigurationManager Lets you create, select, and view multiple configurations of parts and assemblies in a document. Configurations are variations of a part or assembly within a single document. For example, you can use configurations of a bolt to specify different lengths and diameters.

The right panel is the graphics area, where you create and manipulate a part, assembly, or drawing.

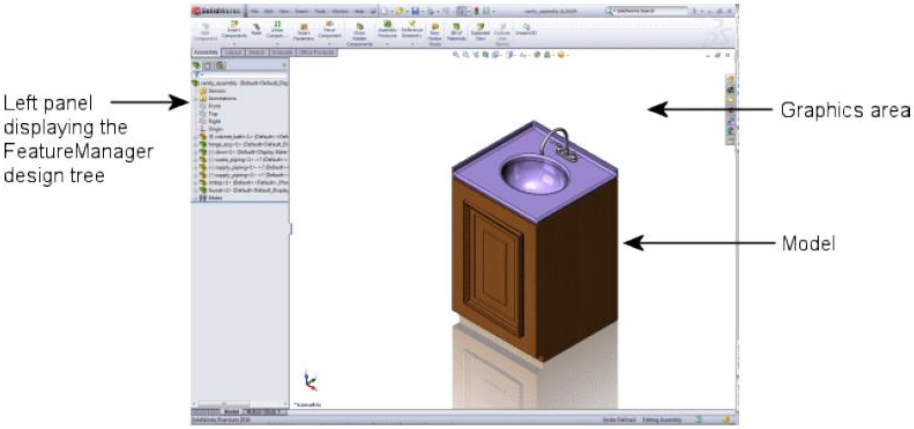

Function Selection and Feedback

The SolidWorks application lets you perform tasks in different ways. It also provides feedback as you perform a task such as sketching an entity or applying a feature. Examples of feedback include pointers, inference lines, and previews.

Menus

You can access all SolidWorks commands using menus. SolidWorks menus use Windows conventions, including submenus and checkmarks to indicate that an item is active. You can also use context-sensitive shortcut menus by clicking the right mouse button.

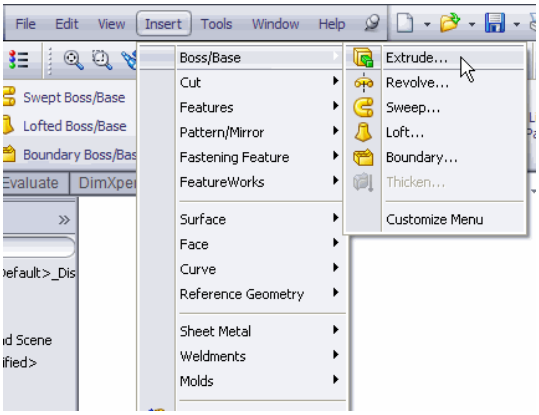

Toolbars

You can access SolidWorks functions using toolbars. Toolbars are organized by function, for example, the Sketch or Assembly toolbar. Each toolbar comprises individual icons for specific tools, such as **Rotate View, Circular Pattern**, and **Circle**.

You can display or hide toolbars, dock them around the four borders of the SolidWorks window, or float them anywhere on your screen. The SolidWorks software remembers the state of the toolbars from session to session. You can also add or delete tools to customize the toolbars. Tooltips display when you hover over each icon.

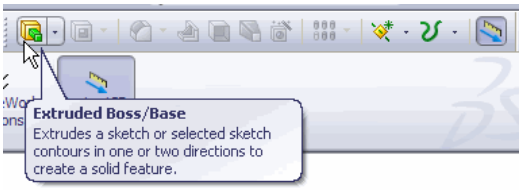

CommandManager

The **CommandManager** is a context-sensitive toolbar that dynamically updates based on the active document type. When you click a tab below the **CommandManager**, it updates to show the related tools. Each document type, such as part, assembly, or drawing, has different tabs defined for its tasks. The content of the tabs is customizable, similar to toolbars. For example, if you click the **Features** tab, tools related to features appear. You can also add or delete tools

to customize the **CommandManager**. Tooltips display when you hover over each icon.

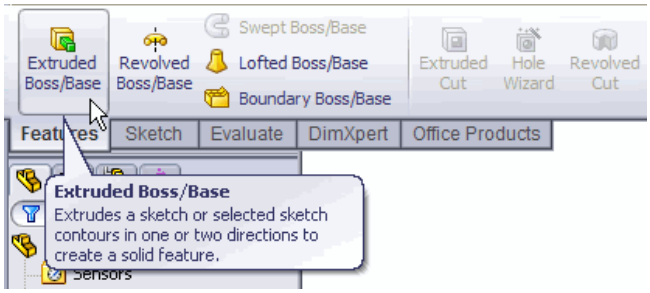

Shortcut Bars

Customizable shortcut bars let you create your own sets of commands for part, assembly, drawing, and sketch mode. To access the bars, you press a user-defined keyboard shortcut,by default, the **S** key.

Context Toolbars

Context toolbars appear when you select items in the graphics area or **FeatureManager** design tree. They provide access to frequently performed actions for that context. Context toolbars are available for parts, assemblies, and sketches.

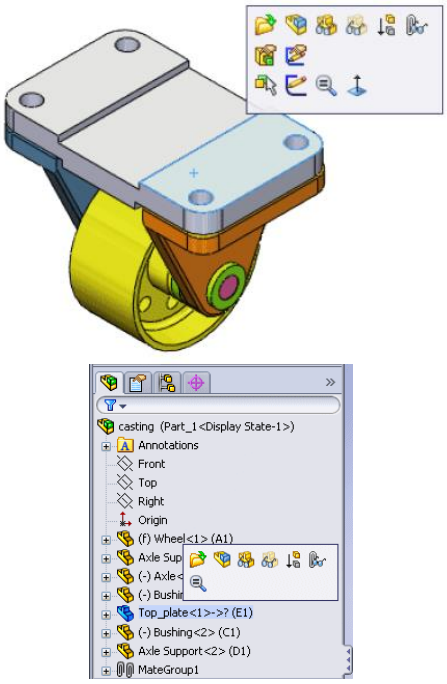

Mouse Buttons

Mouse buttons operate in the following ways:

Left Selects menu items, entities in the graphics area, and objects in the FeatureManager design tree

Right Displays the context-sensitive shortcut menus

Middle Rotates, pans, and zooms a part or an assembly, and pans in a drawing.

Mouse gestures You can use a mouse gesture as a shortcut to execute a command, similar to a keyboard shortcut. Once you learn command mappings, you can use mouse gestures to invoke mapped commands quickly.

To activate a mouse gesture, from the graphics area, right-drag in the gesture direction that corresponds to the command.

When you right-drag, a guide appears, showing the command mappings for the gesture directions.

Sketch guide with eight gestures

Drawings guide with eight gestures

Customizing the User Interface

You can customize the toolbars, menus, keyboard shortcuts, and other elements of the user interface.

Handles

You can use the **PropertyManager** to set values such as the depth of an extrude. You can also use graphic handles to drag and set parameters dynamically without leaving the graphics area.

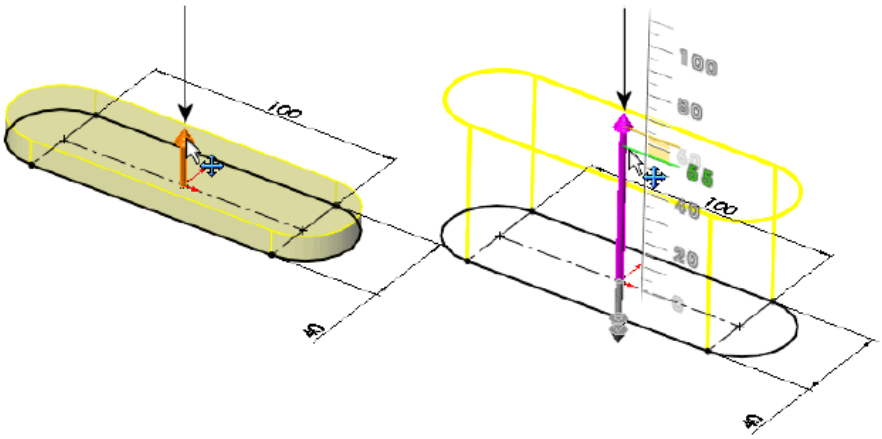

Previews

With most features, the graphics area displays a preview of the feature you want to create. Previews are displayed with features such as base or boss extrudes, cut extrudes, sweeps, lofts, patterns, and surfaces.

Loft preview

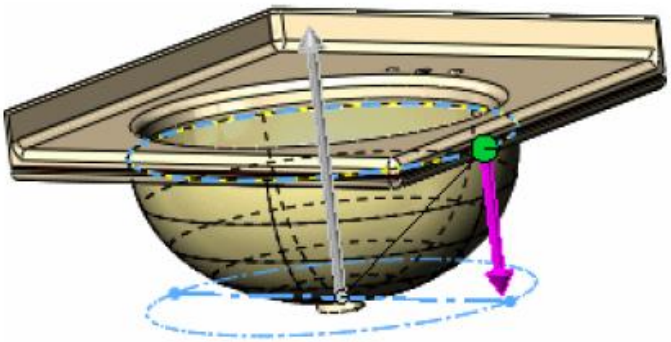

Pointer Feedback

In the SolidWorks application, the pointer changes to show the type of object, for example, a vertex, an edge, or a face. In sketches, the pointer changes dynamically, providing data about the type of sketch entity and the position of the pointer relative to other sketch entities. For example:

Indicates a rectangular sketch.

Indicates the midpoint of a sketch line or edge. To select a midpoint, right-click the line or edge, then click **Select Midpoint**.

Selection Filters

Selection filters help you select a particular type of entity, thereby excluding selection of other entity types in the graphics area. For example, to select an edge in a complex part or assembly, select **Filter Edges** to exclude other entities.

Filters are not restricted to entities such as faces, surfaces, or axes. You can also use the selection filter to select specific drawing annotations, such as notes and balloons, weld symbols, and geometric tolerances.

Additionally, you can select multiple entities using selection filters. For example, to apply a fillet, a feature that rounds off edges, you can select a loop composed of multiple adjacent edges.

Select Other

Use the **Select other** tool to select entities that are visually obscured by other entities.

The tool hides the obscuring entities or lets you select from a list of obscured entities.

Design Process

The design process usually involves the following steps:

- Identify the model requirements.
- Conceptualize the model based on the identified needs.
- Develop the model based on the concepts.
- Analyze the model.
- Prototype the model.
- Construct the model.
- Edit the model, if needed.

Design Intent

Design intent determines how you want your model to react as a result of the changes you need to make to the model. For example, if you make a boss with a hole in it, the hole should move when the boss moves:

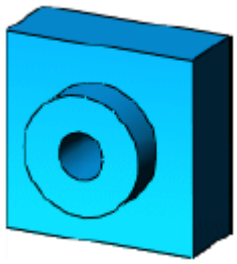

Original part

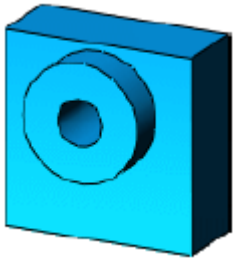

Design intent maintained when boss moves

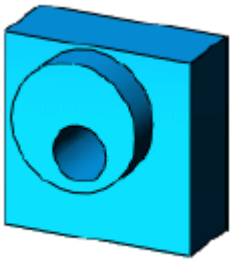

Design intent not maintained when boss moves

Design intent is primarily about planning. How you create the model determines how changes affect it. The closer your design implementation is to your design intent, the greater the integrity of the model.

Various factors contribute to the design process, including:

Current needs	Understand the purpose of the model to design it efficiently.
Future considerations	Anticipate potential requirements to minimize redesign efforts.

Design Method

Before you actually design the model, it is helpful to plan out a method of how to create the model.

After you identify needs and isolate the appropriate concepts, you can develop the model:

Sketches Create the sketches and decide how to dimension and where

to apply relations.

Features Select the appropriate features, such as extrudes and fillets, determine the best features to apply, and decide in what order to apply those features.

Assemblies Select the components to mate and the types of mates to apply.

Sketches

The sketch is the basis for most 3D models. Creating a model usually begins with a sketch. From the sketch, you can create features. You can combine one or more features to make a part. Then, you can combine and mate the appropriate parts to create an assembly. From the parts or assemblies, you can then create drawings.

A sketch is a 2D profile or cross section. To create a 2D sketch, you use a plane or a planar face. In addition to 2D sketches, you can also create 3D sketches that include a Z axis, as well as the X and Y axes.

There are various ways of creating a sketch. All sketches include the following elements:

Origin

In many instances, you start the sketch at the origin, which provides an anchor for the sketch. The sketch on the right also includes a centerline. The centerline is sketched through the origin and is used to create the revolve.

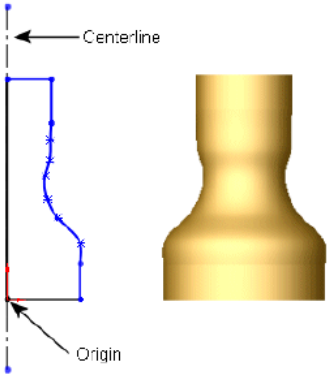

Planes

You can create planes in part or assembly documents. You can sketch on planes with sketch tools such as the **Line** or **Rectangle** tool and create a section view of a model. On some models, the plane you sketch on affects only the way the model appears in a standard isometric view (3D). It does not affect the design intent. With other models, selecting the correct initial plane on which to sketch helps you create a more efficient model.

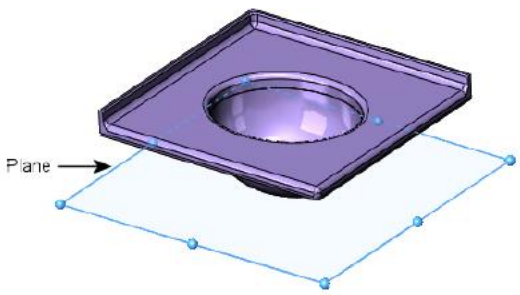

Choose a plane on which to sketch. The standard planes are front, top, and right orientations. You can also add and position

planes as needed. This example uses the top plane.

Dimensions

You can specify dimensions between entities such as lengths and radii. When you change dimensions, the size and shape of the part changes. Depending on how you dimension the part, you can preserve the design intent. The software uses two types of dimensions: driving dimensions and driven dimensions.

Driving Dimensions

You create driving dimensions with the **Dimension** tool. Driving dimensions change the size of the model when you change their values. For example, in the faucet handle, you can change the height of the faucet handle from 40mm to 55mm. Note how the shape of the revolved part changes because the spline is *not* dimensioned.

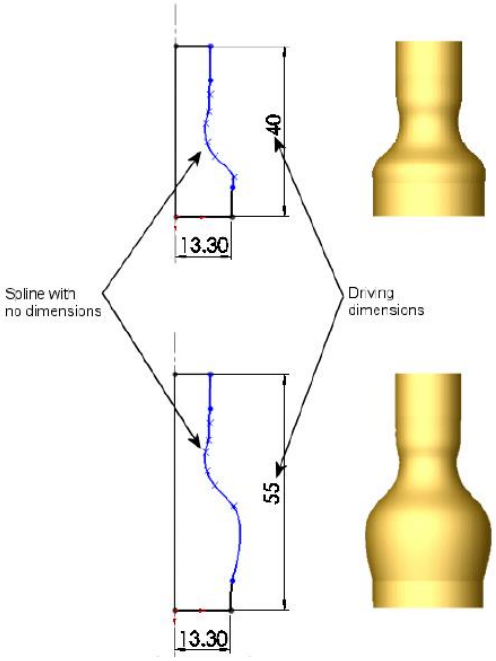

To maintain a uniform shape generated by the spline, you need to dimension the spline.

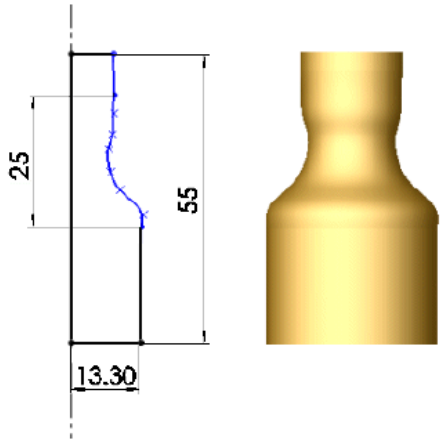

Driven Dimensions

Some dimensions associated with the model are driven. You can create driven, or reference dimensions, for informational purposes using the **Dimension** tool. The value of driven dimensions changes when you modify driving dimensions or relations in the model. You cannot modify the values of driven dimensions directly unless you convert them to driving dimensions.

In the faucet handle, if you dimension the total height as 40mm, the vertical section below the spline as 7mm, and the spline segment as 25mm, the vertical segment above the spline is calculated as 8mm (as shown by the driven dimension).

You control design intent by where you place the driving dimensions and relations. For example, if you dimension the total height as 40mm and create an equal relation between the top and bottom vertical segments, the top segment becomes 7mm. The 25mm vertical dimension conflicts with the other dimensions and relations (because 40-7-7=26, not 25). Changing the 25mm dimension to a driven dimension removes the conflict and shows that the spline length must be 26mm.

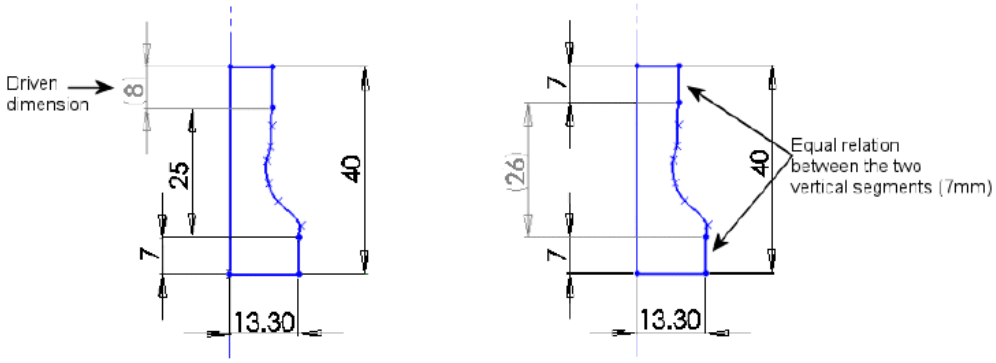

Sketch Definitions

Sketches can be fully defined, under defined, or over defined. In fully defined sketches, all the lines and curves in the sketch, and their positions, are described by dimensions or relations, or both. You do not have to fully define

sketches before you use them to create features. However, you should fully define sketches to maintain your design intent.

Fully defined sketches appear in black.

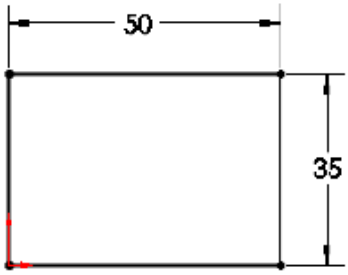

By displaying the entities of the sketch that are under defined, you can determine what dimensions or relations you need to add to fully define the sketch. You can use the color cues to determine if a sketch is under defined. Under defined sketches appear in blue.

In addition to color cues, entities in under defined sketches are not fixed within the sketch, so you can drag them.

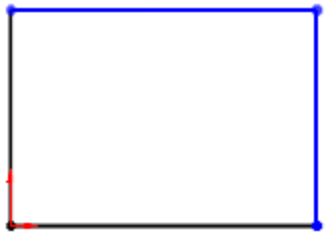

Over defined sketches include redundant dimensions or relations that are in conflict. You can delete over defined dimensions or relations, but you cannot edit them.

Over defined sketches appear in yellow. This sketch is over defined because both vertical lines of the rectangle are dimensioned. By definition, a rectangle has two sets of equal sides. Therefore, only one 35mm dimension is necessary.

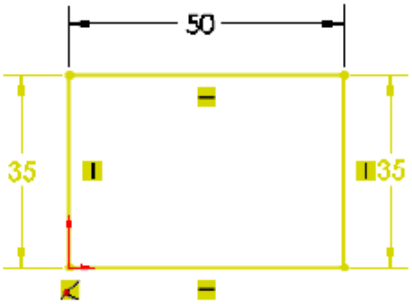

Relations

Relations establish geometric relationships such as equality and tangency between sketch entities. For example, you can establish equality between the two horizontal 100mm entities below. You can dimension each horizontal entity

individually, but by establishing an equal relation between the two horizontal entities, you need to update only one dimension if the length changes.

The green symbols = indicate that there is an equal relation between the horizontal lines:

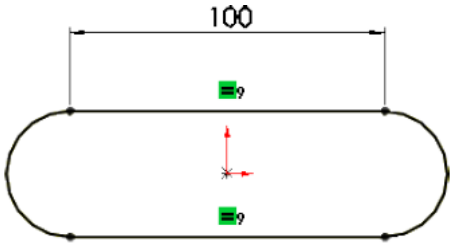

Inference Some relations are created by inference. For example, as you sketch the two horizontal entities to create the base extrude for the faucet base, horizontal and parallel relations are created by inference.

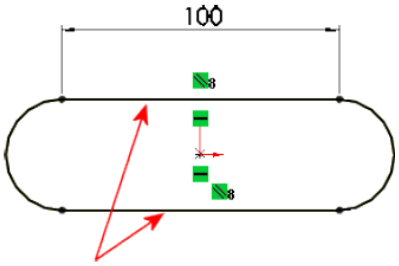

Add Relations You can also use the **Add Relations** tool. For example, to create the faucet stems, you sketch a pair of arcs for each stem. To position the stems, you add a tangent relation between the outer arcs and the top construction line horizontal (displayed as a broken line). For each stem, you also add a concentric relation between the inner and outer arcs.

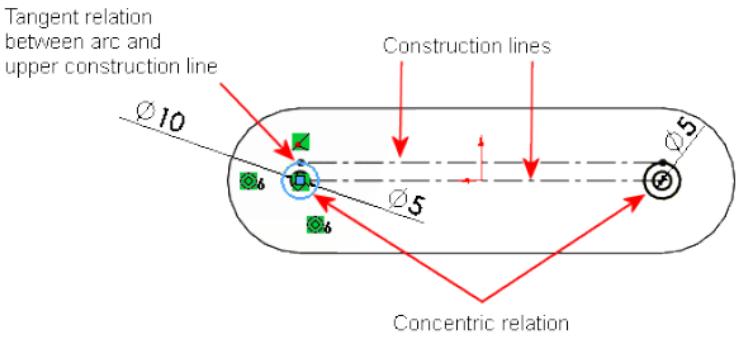

Sketch Complexity

A simple sketch is easy to create and update, and it rebuilds quicker.

One way to simplify sketching is to apply relations as you sketch. You can also take advantage of repetition and symmetry. For example, the faucet stems on the faucet base include repeated sketched circles:

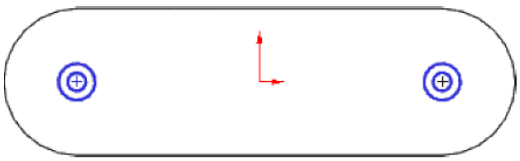

Here is one way you can create this sketch:

First, sketch a centerline through the origin. Centerlines help to create symmetrical sketch entities. This centerline is considered construction geometry, which is different from actual geometry that is used in creating a part. Construction geometry is used only to assist in creating the sketch entities and geometry that are ultimately incorporated into the part.

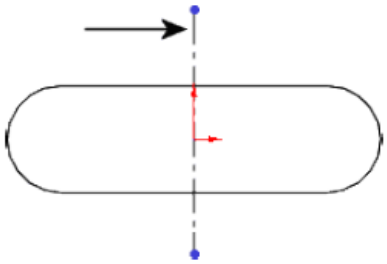

Second, use the **Dynamic Mirror** tool to designate the centerline as the entity about which to mirror the sketched circles.

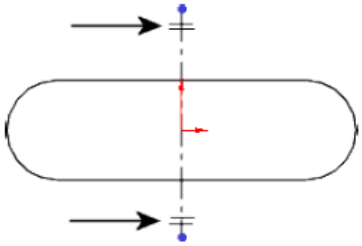

Next, sketch a circle by inferencing the sketch origin. When you use dynamic mirroring with the centerline, anything you sketch on one side is mirrored on the other side of the centerline.

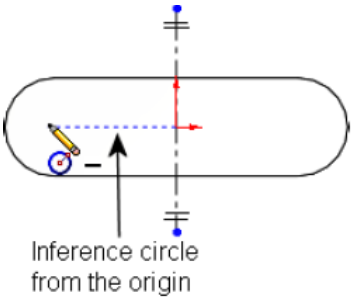

You create the circles on the left and they are mirrored to the right of the centerline.

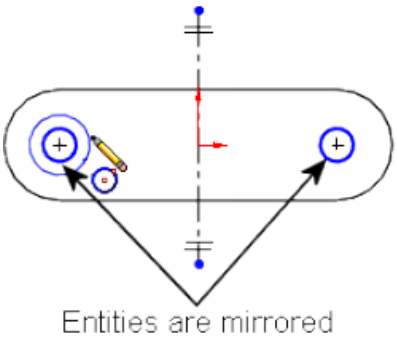

Finally, dimension and add a concentric relation between one of the circles and the outer arc of the base, and then use symmetry for the other.

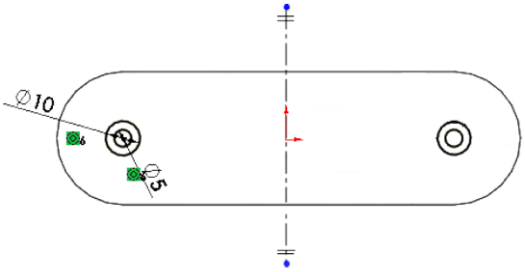

Features

Once you complete the sketch, you can create a 3D model using features such as an extrude (the base of the faucet) or a revolve (the faucet handle).

Create the sketch

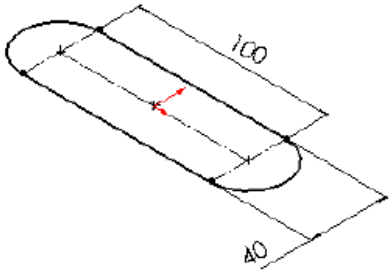

Dimension the sketch

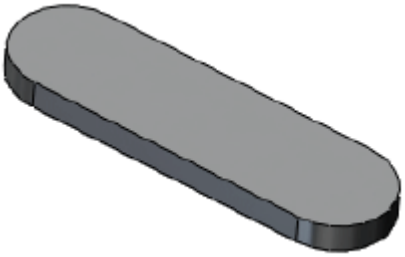

Extrude the sketch 10mm

Some sketch-based features are shapes such as bosses, cuts, and holes. Other sketch-based features such as lofts and sweeps use a profile along a path. Another type of feature is called an applied feature, which does not require a sketch. Applied features include fillets, chamfers, or shells. They are called "applied" because they are applied to existing geometry using dimensions and other characteristics to create the feature.

Typically, you create parts by including sketch-based features such as bosses and holes. Then you add applied features.

Sketch-based features: Base sweep for the waste pipe

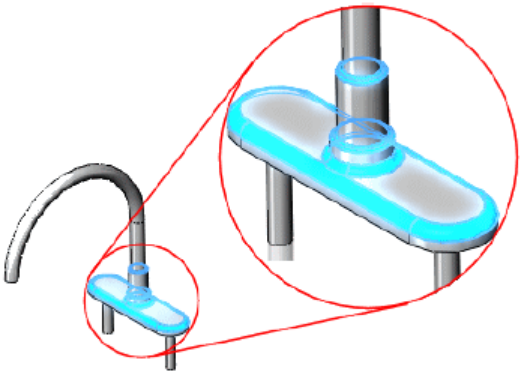

Applied feature: Fillets for rounding off edges

Assemblies

You can combine multiple parts that fit together to create assemblies.

You integrate the parts in an assembly using **Mates**, such as **Concentric** and **Coincident**. Mates define the allowable direction of movement of the components. In the faucet assembly, the faucet base and handles have concentric and coincident mates.

With tools such as **Move Component** or **Rotate Component**, you can see how the parts in an assembly function in a 3D context.

To ensure that the assembly functions correctly, you can use assembly tools such as **Collision Detection**. **Collision Detection** lets you find collisions with other components when moving or rotating a component.

Faucet assembly with **Collision Detection**, **Stop at collision** option enabled

Drawings

You create drawings from part or assembly models. Drawings are available in multiple views such as standard 3 views and isometric views (3D). You can import the dimensions from the model document and add annotations such as datum target symbols.

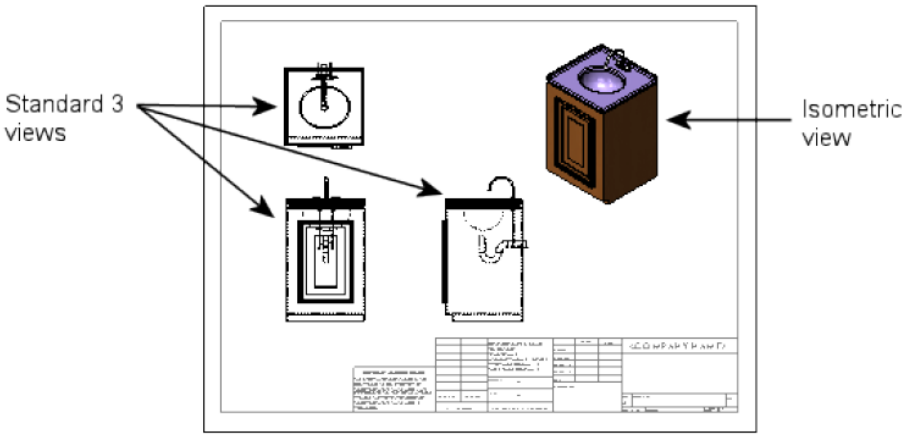

Model Editing

Use the SolidWorks FeatureManager design tree and the PropertyManager to edit sketches, drawings, parts, or assemblies. You can also edit features and sketches by selecting them directly from the graphics area. This visual approach eliminates the need to know the name of the feature.

Editing capabilities include:

Edit sketch You can select a sketch in the **FeatureManager** design tree and edit it. For example, you can edit sketch entities, change dimensions, view or delete existing relations, add new relations between sketch entities, or change the size of dimension displays. You can also select the feature to edit directly from the graphics area.

Edit feature Once you create a feature, you can change most of its values. Use **Edit Feature** to display the appropriate **PropertyManager**. For example, if you apply a **Constant radius** fillet to an edge, you display the Fillet **PropertyManager** where you can change the radius. You can also edit dimensions by double-clicking the feature or sketch in the graphics area to show the dimensions and then change them in place.

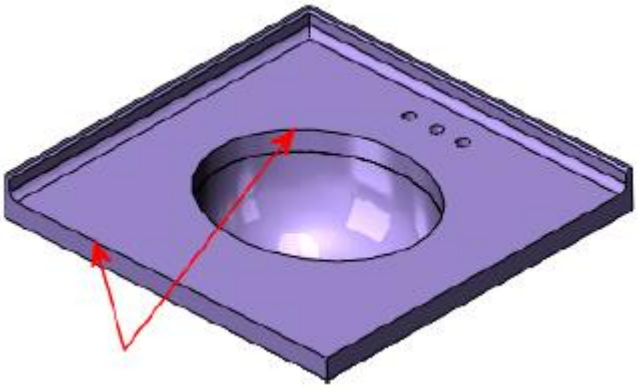

No fillet feature

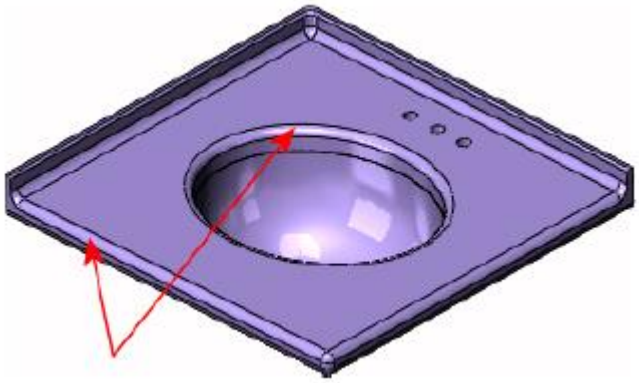

Fillet feature: 12mm applied

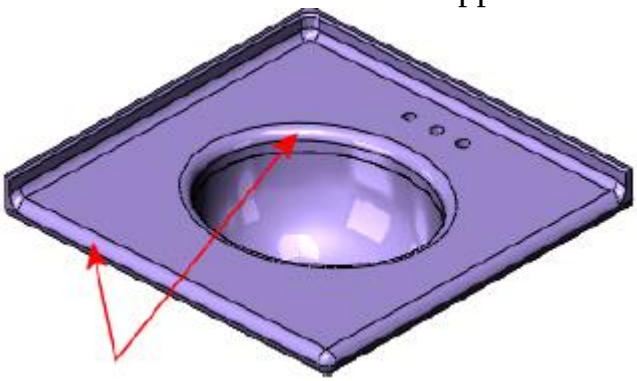

Fillet feature: 18mm applied

Hide and show

With certain geometry such as multiple surface bodies in a single model, you can hide or show one or more surface bodies. You can hide and show sketches, planes, and axes in all documents, and views, lines, and components in drawings.

Suppress and unsuppress

You can select any feature from the **FeatureManager** design tree and suppress the feature to view the model without that feature. When a feature is suppressed, it is temporarily removed from the model (but not deleted). The feature disappears from the model view. You can then unsuppress the

feature to display the model in its original state. You can suppress and unsuppress components in assemblies as well

Rollback

When you are working on a model with multiple features, you can roll the **FeatureManager** design tree back to a prior state. Moving the rollback bar displays all features in the model up to the rollback state, until you revert the **FeatureManager** design tree back to its original state. Rollback is useful for inserting features before other features, speeding up time to rebuild a model while editing it, or learning how a model was built.

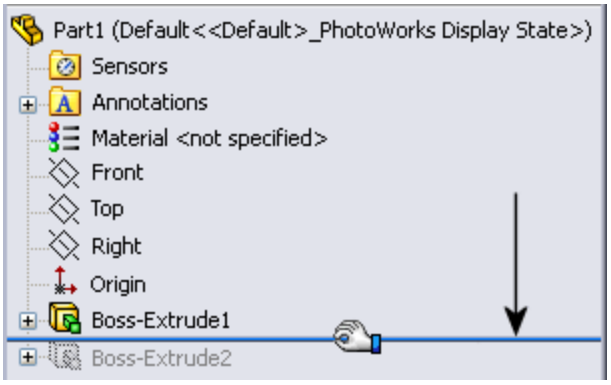

Lesson 1. Parts

Part 1.

Hours of work: 45 min

In this lesson, you create your first SolidWorks parts.

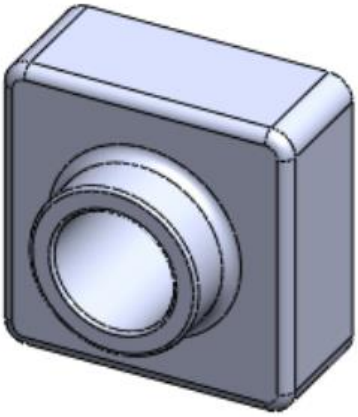

Step 1. Setting up a new part document
Open a new part document and save it as *Part1*

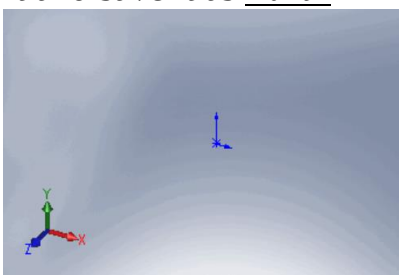

1. Click **New** (Standard toolbar).
2. In the New SolidWorks Document dialog box, double-click Part.
3. Click **Save** (Standard toolbar).
4. In the dialog box, type *Part1* for File name.
5. Click **Save**.

Step 2. Creating the base feature

1. Click **Extruded Boss/Base** (Features toolbar).

The Front, Top, and Right planes appear and the pointer changes to . As you move the pointer over a plane, the border of the plane is highlighted.

2. Select the Front plane.
   - The display changes so the Front plane faces you.
   - The Sketch toolbar commands appear in the **CommandManager**.
   - A sketch opens on the Front plane.
3. Click **Corner Rectangle** (Sketch toolbar).

4. Move the pointer to the sketch origin .

The pointer is on the origin when it changes to

5. Click the origin and drag the pointer up and to the right. Notice that it displays the current dimensions of the rectangle.

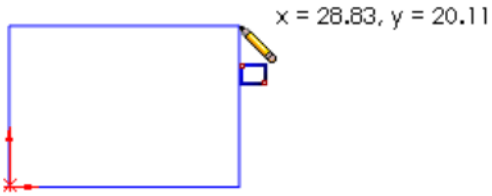

6. Release the Corner Rectangle tool by doing one of the following:
   - Click the button for the tool you are currently using.
   - Press **Esc**.
   - Press **Enter**.
   - Click the button for the next tool you want to use.
   - Click **Select** (Standard toolbar).

7. Click **Select** (Standard toolbar).

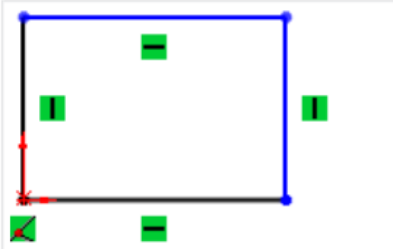

The sides of the rectangle that touch the origin are black. Because you started sketching at the origin, the vertex of these two sides is automatically coincident with the origin, as shown by the symbol . This relationship constrains the sketch.

8. Drag one of the blue sides or drag the vertex to resize the rectangle.

9. Click **Smart Dimension** (Dimensions/Relations toolbar).

10. Select the top edge of the rectangle.

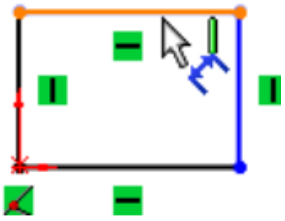

11. Click above the line to place the dimension. The Modify dialog box appears.

12. Set the value to 120.

13. Click . The sketch resizes to reflect the 120mm dimension

14. Repeat steps 8-13, with a vertical line, setting the height of the rectangle to 120mm.

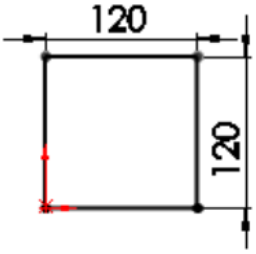

The sketch is now fully defined, as shown in the status bar at the bottom of the SolidWorks window.

15. Click **Exit Sketch** (Sketch toolbar). **The Boss-Extrude PropertyManager** appears in the left pane, the view of the sketch changes to Trimetric, and a preview of the extrusion appears in the graphics area.

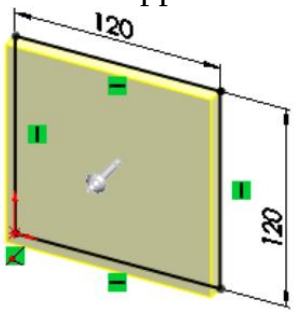

16. In the **PropertyManager**, under Direction 1:
    a. Select **Blind in End Condition**.
    b. Set **Depth** to 30.

17. Click . The new feature, Boss-Extrude1, appears in the **FeatureManager** design tree and in the graphics area.

Step 3. Adding a boss feature

1. Click the front face of the model to preselect the sketch plane for the next feature.
2. Click **Extruded Boss/Base** (Features toolbar).
3. Click **Normal To** (Standard Views toolbar).
4. Click **Circle** (Sketch toolbar).
5. Click near the center of the face and move the pointer to sketch a circle.
6. Release the circle tool.

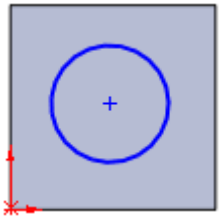

7. Click **Smart Dimension** (Dimensions/Relations toolbar).
8. Select the circle.

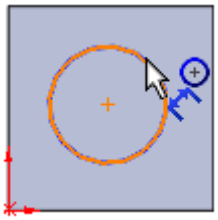

9. Move the pointer outside the model to see the current dimension.
10. Click to place the dimension.
11. In the Modify dialog box:
   a. Set the value to 70.
   b. Click ✔.
12. Still using **Smart Dimension** , select the top edge of the face, select the circle, and click to place the dimension.

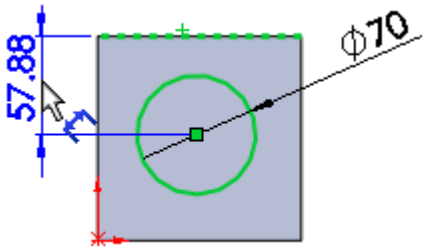

13. In the Modify dialog box:
   a. Set the value to 60.
   b. Click ✔

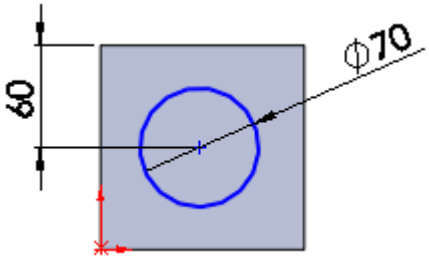

14. Repeat steps 12 and 13, selecting the right edge of the face and the circle.

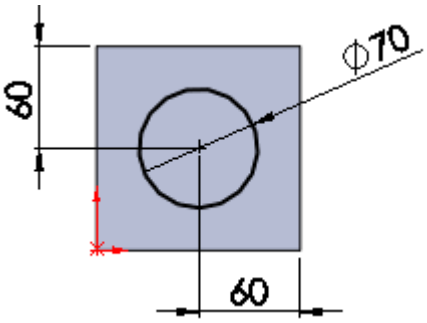

The circle turns black, and the status bar indicates that the sketch is fully defined.

15. Click **Exit Sketch** (Sketch toolbar). The Boss-Extrude **PropertyManager** appears in the left pane, the view of the sketch changes to Trimetric, and a preview of the extrusion appears in the graphics area.

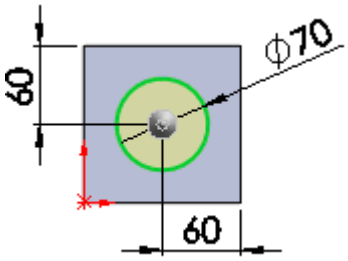

16. Click **Trimetric** (Standard Views toolbar).

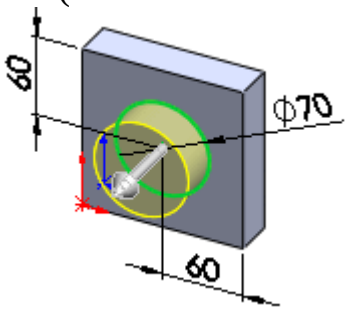

17. In the **PropertyManager**, under Direction 1:
   a. Select **Blind in End Condition**.
   b. Set **Depth** to 25.
18. Click

Boss-Extrude2 appears in the **FeatureManager** design tree.

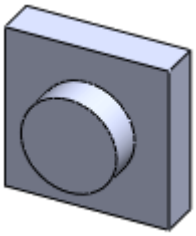

Step 4. Creating a cut feature

1. Click **Extruded Cut** (Features toolbar).
2. Select the front face of the circular boss.
3. Click **Normal To** (Standard Views toolbar).
4. Click **Circle** (Sketch toolbar).
5. Move the pointer to the center of the boss.

The pointer changes to indicate that the center of the circle is coincident with the center of the boss.

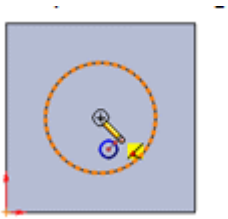

6. Drag to create the circle and release the tool.
7. Click **Smart Dimension** and set the diameter of the hole to 50.

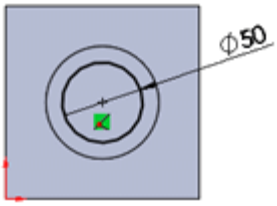

8. Click **Exit Sketch** (Sketch toolbar).
The sketch closes and the Cut-Extrude **PropertyManager** appears.
9. Click **Trimetric** (Standard Views toolbar).

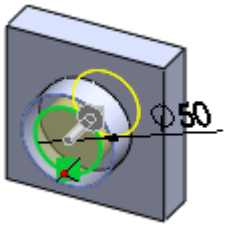

10. In the **PropertyManager**, under Direction 1, set **End Condition to Through All**.
11. Click .

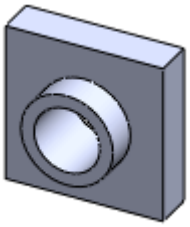

Step 5. Adding fillets
1. Click **Fillet** (Features toolbar).
2. Under Fillet Type, select **Constant size**.
3. Select the front face of the base.
4. Under Fillet Parameters, set **Radius** to 5.
5. Under Items To Fillet, select **Full Preview**.
The face is highlighted and a preview of the filleted face is displayed

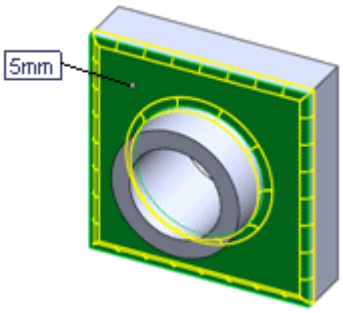

6. Select the four edges at the corners of the base.

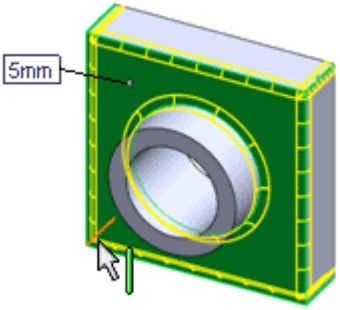

As you select each edge, its name is added to Edges, Faces, Features and Loops and the preview is updated.

7. Click .
8. Click **Fillet** (Features toolbar).
9. Under Fillet Parameters, set **Radius** to 1.5.
10. Right-click on either the inner or outer edge of the boss face and click Select Other.
11. Select the face of the boss from the pop-up list.

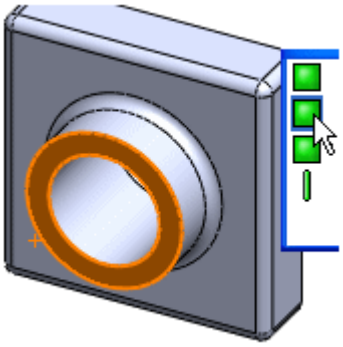

12. Click **Zoom to Selection** (View toolbar).

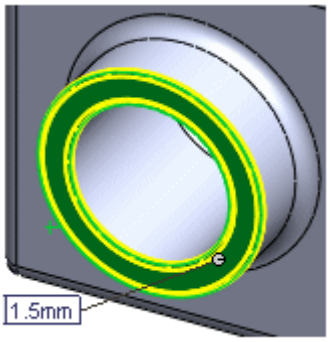

13. Click ✓.

Step 6. Adding a shell feature

1. Click **Rotate** View (View toolbar).
2. Drag the pointer to rotate the part until you can see the back.
3. Do one of the following to release the tool:
   - Click the button for the tool you are currently using.
   - Press **Esc**.
   - Press **Enter**.
   - Click the button for the next tool you want to use.
   - Click **Select** (Standard toolbar).
4. Select the back face.

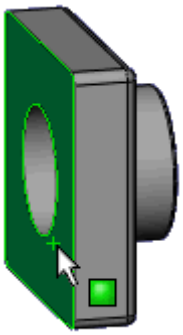

5. Click **Shell** (Features toolbar).
6. Under Parameters, set **Thickness** to 2.
7. Click ✓. The shell operation removes the selected face and leaves a thin-walled part.

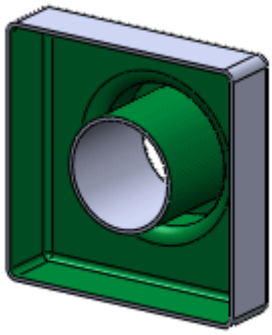

Step 7. Editing features

1. Click **Trimetric** (Standard Views toolbar).
2. Double-click **Boss-Extrude1** in the **FeatureManager** design tree. The feature dimensions appear in the graphics area.

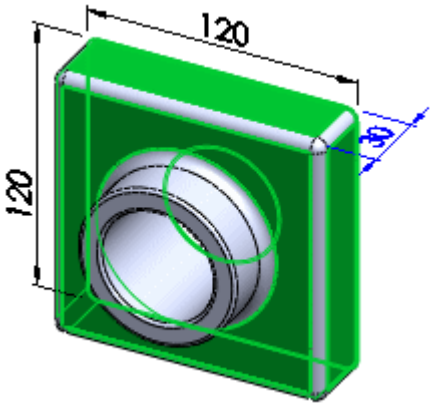

3. Double-click 30.

4. In the Modify dialog box, set the value to 50 and click ✓.

5. Click **Rebuild** (Standard toolbar) to regenerate the model with the new dimension.

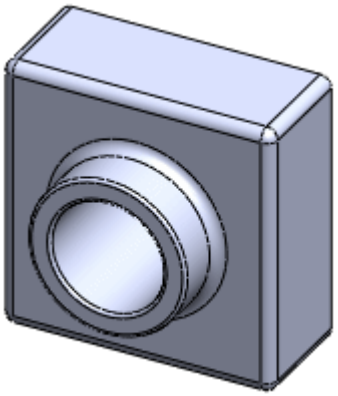

6. Click **Save** (Standard toolbar).

7. In the **FeatureManager** design tree, right-click **Fillet1** and select **Edit Feature**

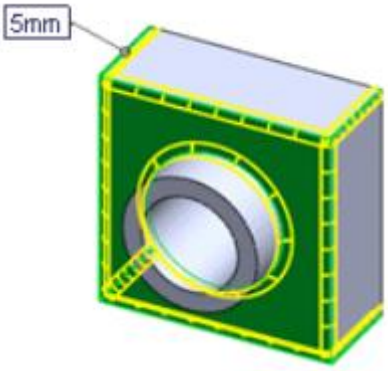

8. Under Items To Fillet, scroll down and right-click Face<1>.

9. Click Delete.

The fillets on the face are removed.

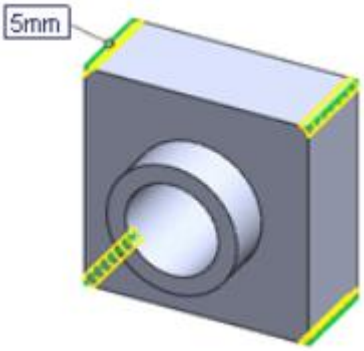

10. Change the radius to 10.

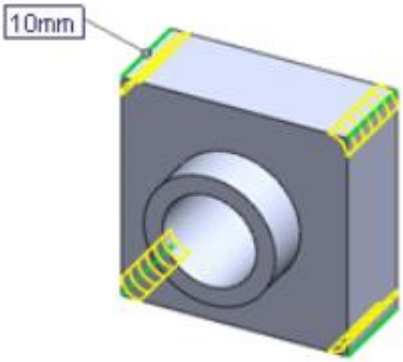

11. Click ✔

12. In the **FeatureManager** design tree, place the pointer over the rollback bar below the Shell1 feature. The pointer changes to a hand:

13. Drag the rollback bar above the Shell1 feature.

14. Click **Fillet** (Features toolbar).

15. Select the front face of the base. The model shows the last radius used, 10mm.

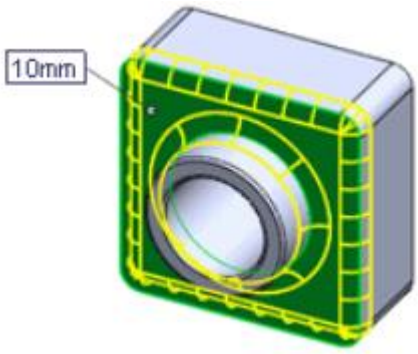

16. Under Items To Fillet, change the **Radius** to 5

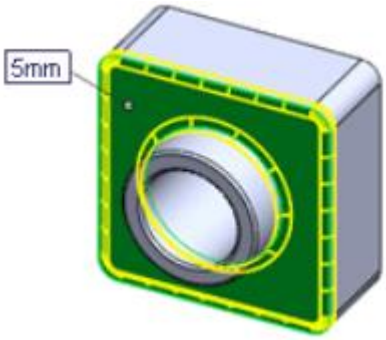

17. Click ✔
18. Drag the rollback bar below the Shell1 feature

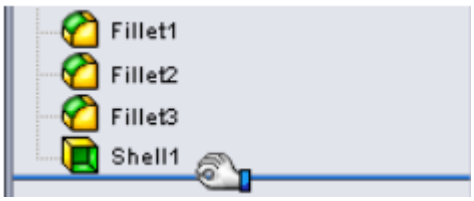

Step 8. Completed Part

1. Click **Shaded** (View toolbar).
2. Select **RealView Graphics** (View toolbar).
3. Assign a material:
   a. Select the part name at the top of the **FeatureManager** design tree.
   b. Click **Edit Material** (Standard toolbar).
   c. In the Material dialog box, on the Properties tab, expand Steel.
   d. Select Chrome Stainless Steel.
   e. Click **Apply** and click **Close**.

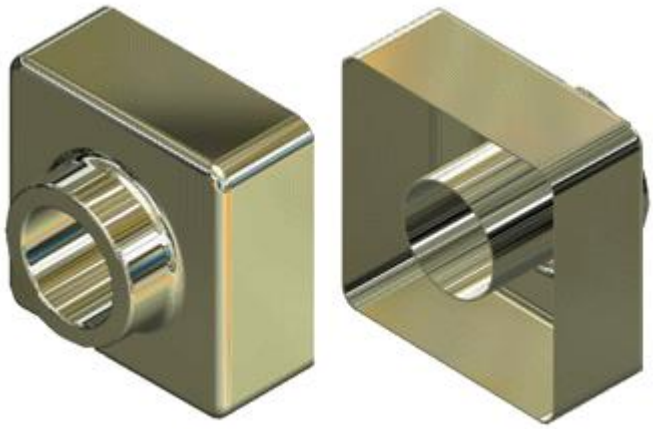

Part 2

Hours of work: 45 min.

1. Click **New** (Standard toolbar) and open a new part.

2. Click **Extruded Boss/Base** (Features toolbar) and select the Front plane.

3. Sketch a rectangle beginning at the origin.

4. Click **Smart Dimension** (Dimensions/Relations toolbar) and dimension the rectangle to 120mm x 120mm.

5. Click **Exit Sketch** (Sketch toolbar) to exit the sketch.

The Extrude **PropertyManager** and a preview of the extrusion appear.

6. Under Direction1:

   a. Set **End Condition to Blind**.

   b. Set **Depth** to 90.

7. Click to create the extrusion.

8. Click **Fillet** (Features toolbar) and select the four edges shown.

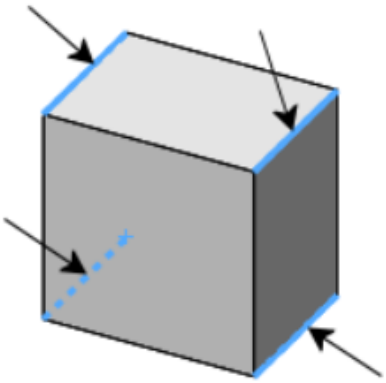

9. In the **PropertyManager**, under Fillet Parameters, set **Radius** to 10.

10. Click to fillet the selected edges.

11. Click **Shell** on the Features toolbar.

12. The Shell **PropertyManager** appears.

13. Select the front face of the model. The face is listed in **Faces to Remove** in the **PropertyManager**.

14. Under Parameters, set **Thickness** to 4.

15. Click .

16. Save the part as *Part2*

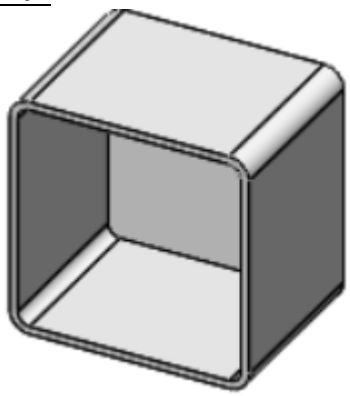

17. Click **Zoom to Area** (View toolbar) and drag-select to a corner of the part, as shown.

18. Click **Zoom to Area** (View toolbar) again to turn off the tool.

19. Select the front face of the thin wall.

20. The face is highlighted.

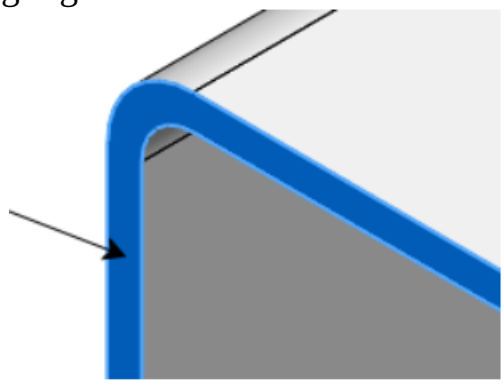

21. Click **Extruded Cut** (Features toolbar).

22. A sketch opens on the selected face.

23. Click **Convert Entities** (Sketch toolbar).

24. The outer edges of the selected face are projected (copied) onto the sketch plane as lines and arcs.

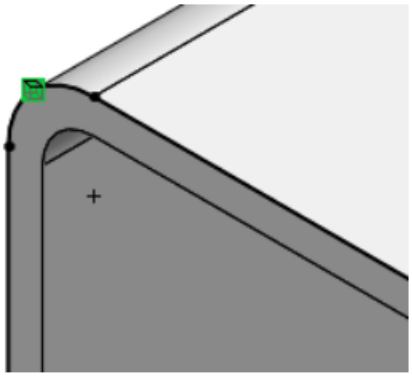

25. Click the front face again.

26. Click **Offset Entities** (Sketch toolbar).

27. The Offset Entities **PropertyManager** appears

28. Under Parameters, set **Offset Distance** to 2. The preview shows the offset extending outward.

29. Select **Reverse** to change the offset direction.

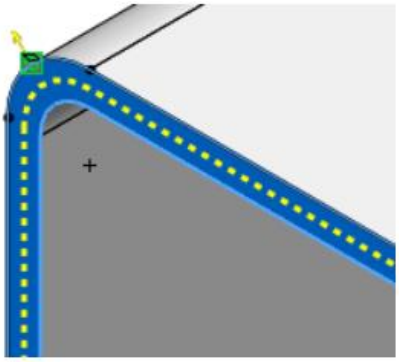

30. Click ✓. A set of lines is added to the sketch, offset from the outside edge of the selected face by 2mm. This relation is maintained if the original edges change.

31. Click **Exit Sketch** (Sketch toolbar) to exit the sketch. The **Extrude PropertyManager** appears.

32. Under Direction 1, set **Depth** to 20.

33. Click ✓. The material between the two lines is cut, creating the lip.

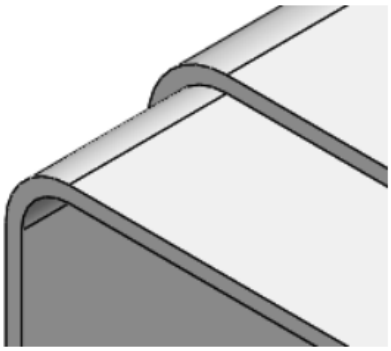

34. Click **Zoom to Fit** (View toolbar).

Changing the Color of a Parts

1. Right-click the *Part2* icon at the top of the **FeatureManager** design tree.
2. On the context toolbar, select **Appearances** , and then select Part2.
3. In the **PropertyManager**, under **Color**, select the desired color on the color palette, then click **OK** ✓.
4. Save the part.

Tasks for Lesson 1

Total hours of work: 120 min

To create a three-dimensional models (Parts) for upper (Fig.1) and lower (Fig.2) platen die block of a given variant. Save models.

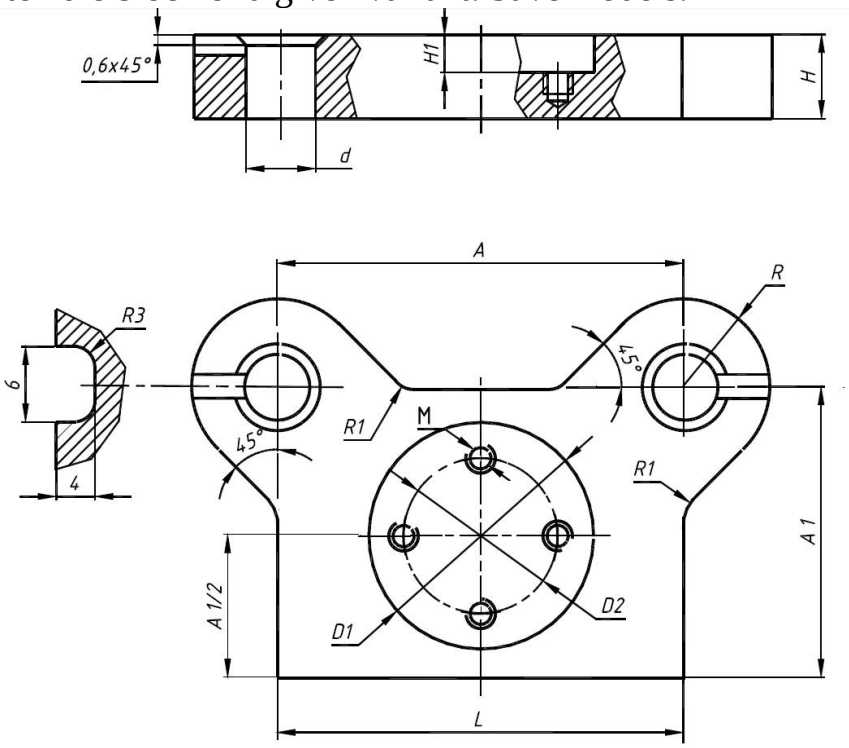

Fig. 1 – Upper platen die block

№ of var.	L	H	A	A1	d	R	R1	D1	D2	M
1	100	36	100	120	38	36	10	50	35	M5
2	125	36	125	120	38	36	10	53	38	M5
3	160	45	160	125	45	45	16	55	40	M5
4	125	45	125	145	45	45	16	58	43	M5
5	125	45	125	145	45	45	16	60	45	M5
6	160	45	160	140	45	45	16	63	48	M5
7	160	45	160	147	45	45	16	66	51	M5
8	160	45	160	150	45	45	16	68	53	M6
9	125	45	125	170	45	45	16	70	55	M6
10	160	45	160	166	45	45	16	73	58	M6
11	160	45	160	169	45	45	16	75	60	M6
12	160	45	160	170	45	45	16	78	63	M8
13	200	50	200	170	45	45	16	80	65	M8
14	160	50	160	205	45	45	16	82	67	M8
15	200	50	200	200	45	45	16	85	70	M8
16	200	50	200	205	45	45	16	87	72	M8
17	200	50	200	210	45	45	16	90	75	M8
18	250	56	250	215	56	56	25	92	77	M8
19	250	56	250	220	56	56	25	95	80	M8
20	250	56	250	223	56	56	25	98	83	M8

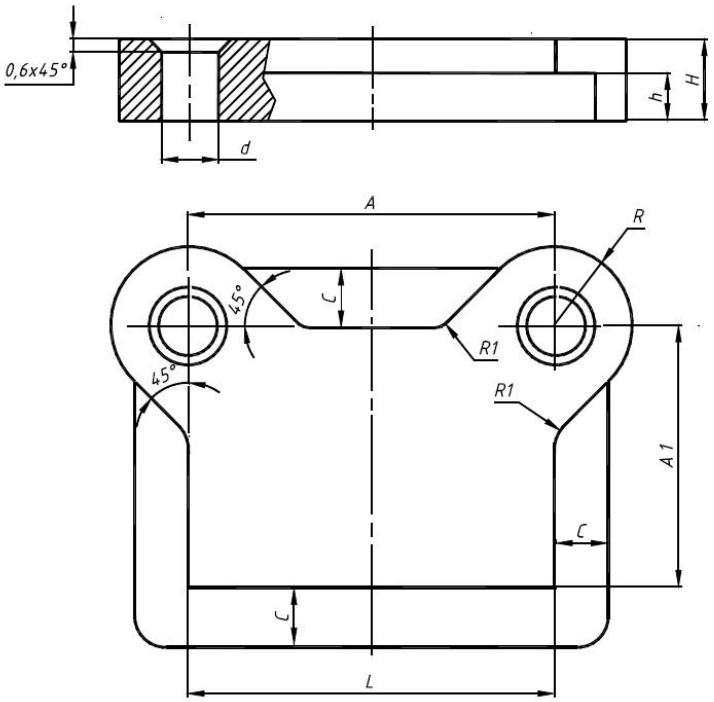

Fig. 2 – Lower platen die block

№ of var.	**L**	**H**	**h**	**d**	**A**	**A1**	**C**	**R**	**R1**
1	100	40	25	25	100	120	25	36	10
2	125	40	25	25	125	120	25	36	10
3	160	50	25	32	160	125	25	45	16
4	125	50	25	32	125	145	25	45	16
5	140	50	25	32	140	145	25	45	16
6	160	50	25	32	160	140	32	45	16
7	160	50	25	32	160	147	32	45	16
8	160	50	25	32	160	150	32	45	16
9	125	50	25	32	125	170	32	45	16
10	160	50	25	32	160	166	32	45	16
11	160	50	25	32	160	169	32	45	16
12	160	50	25	32	160	170	32	45	16
13	200	56	25	32	200	170	32	45	16
14	160	56	25	32	160	205	40	45	16
15	200	56	25	32	200	200	40	45	16
16	200	56	25	32	200	205	40	45	16
17	200	56	25	32	200	210	40	45	16
18	250	63	32	40	250	215	40	56	25
19	250	63	32	40	250	220	40	56	25
20	250	63	32	40	250	223	40	56	25

Lesson 2. Revolve and Sweep Features

Hours of work: 45 min.

In this lesson, you create the candlestick shown below.

Step 1. Sketching a Revolve Profile

1. Click **New** on the Standard toolbar and create a new part.
2. Click **Revolved Boss/Base** on the Features toolbar. The Front, Top, and Right planes appear.
3. Select the **Front** plane. A sketch opens on the Front plane.
4. Click **Line** on the Sketch toolbar. Sketch a vertical line from the origin, and sketch the two horizontal lines as shown.
5. Click **Smart Dimension** on the Sketch toolbar. Dimension the sketch as shown.

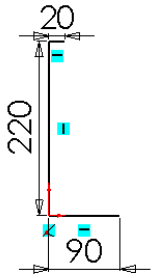

6. Click **Tangent Arc** (Sketch toolbar).
7. Click the endpoint of the top horizontal line, move the pointer to the right, then downward.
8. When the radius is approximately 10mm (R=10) and the vertical inferencing line is visible, click again.

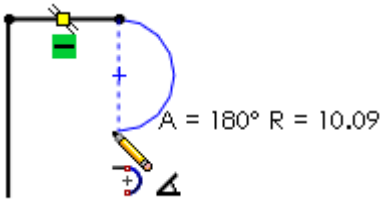

9. Click **Smart Dimension** on the Sketch toolbar and dimension the arc radius to 10.

10. Click **Line** on the Sketch toolbar, or right-click in the graphics area and select Line from the shortcut menu.

11. Sketch a vertical line downward approximately 150mm long, starting at the lower endpoint of the arc.

12. Click **3 Point Arc** on the Sketch toolbar, or right-click in the graphics area and select 3 Point Arc.

13. Sketch an arc so that the arc endpoints are coincident with the line. (Watch for the pointer.) Use the following measurements:

- Length approximately 40mm (L=40)
- Angle approximately 180° (A=180)
- Radius approximately 20mm (R=20)

14. After clicking to end the arc, set the angle to 180° in the Parameters section of the PropertyManager.

15. Click **Smart Dimension** on the Sketch toolbar or right-click in the graphics area and select Smart Dimension, then dimension the arc radius to 20.

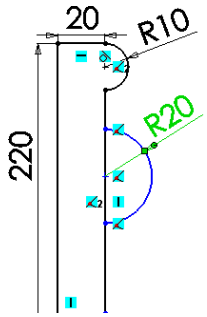

16. Click **Trim Entities** on the Sketch toolbar.

17. In the PropertyManager, under Options, click **Trim to closest** .

18. Select the highlighted segment to delete it.

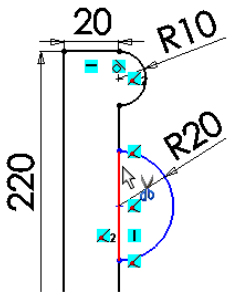

19. Right-click in the graphics area and select **Smart Dimension**. Dimension the upper vertical line to 40, as shown.

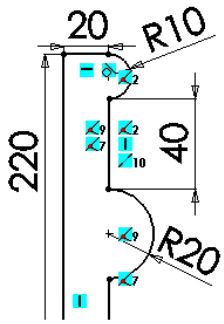

20. Click **Select** on the Standard toolbar, then hold down Ctrl and select the vertical lines on each side of the lower arc.

21. In the PropertyManager, under **Add Relations**, click **Equal**, then click **OK**. The Equal relation ensures that both vertical lines will maintain equal length.

22. Click **Tangent Arc** on the Sketch toolbar, then click the endpoint of the lower vertical line.

23. Move the pointer downward to create an arc that has an angle of 90° and a radius of approximately 60mm. Click to place the arc.

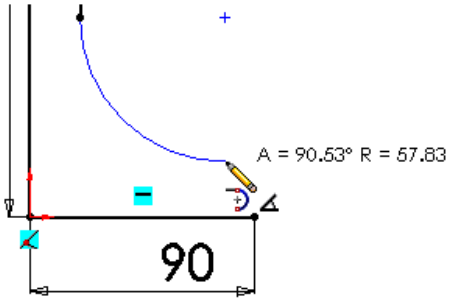

24. Sketch another tangent arc. Move the pointer until the endpoint of the arc is coincident with the endpoint of the bottom horizontal line as shown.

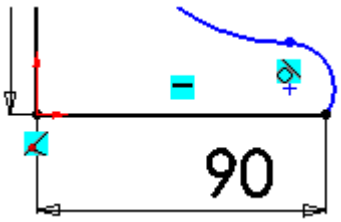

25. Click **View** > **Sketch Relations** to hide the sketch relations in the graphics area.

26. Dimension the rest of the sketch as shown.

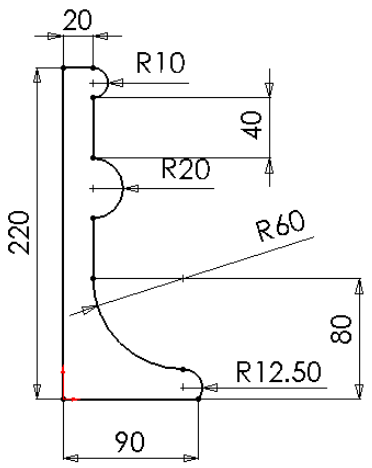

When you are done dimensioning, the sketch is fully defined (All lines and endpoints are black).

Step 2. Creating the Revolve Feature

1. Click **Exit Sketch** on the Sketch toolbar. The Revolve PropertyManager appears.
2. For **Axis of Revolution**, select the long vertical line in the sketch.
3. Under **Direction1**:
   a. In **Revolve Type**, select **Blind**.
   b. Set **Direction 1 Angle** to 360.
   c. Click ✔.

The Revolve feature is created.

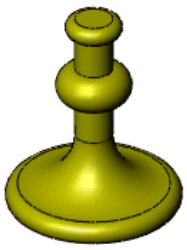

4. Save the part as *Rev1*.

Step 3. Sketching the Sweep Path

1. Select the Front plane in the FeatureManager design tree, then click **Sketch** on the Sketch toolbar to open a new sketch.
2. Click **Front** on the Standard Views toolbar.
3. Click **Hidden Lines Removed** on the View toolbar.
4. Click **View** > **Temporary Axes**. Notice that the temporary axis of the revolved base appears.
5. Right-click in the graphics area and select **Line**, then move the pointer over the temporary axis. The pointer changes to indicating that the pointer is exactly on the temporary axis.
6. Sketch a horizontal line as shown, and dimension the line to 60.

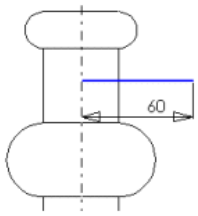

7. Right-click in the graphics area and select **Tangent Arc**.
8. Sketch an arc starting at the endpoint of the line.
9. Dimension the arc to a radius of 150.
10. Select the endpoints of the arc and set the vertical dimension to 65.

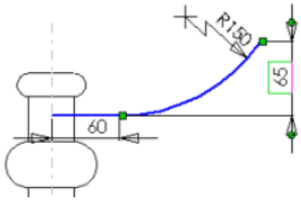

11. Right-click and select **Tangent Arc**, then sketch another arc as shown.
12. Dimension it to a radius of 20.

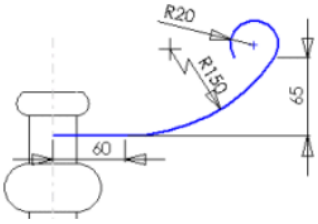

13. Click **Select** on the Standard toolbar, then hold down **Ctrl** and select the endpoints of the tangent arc you just sketched.

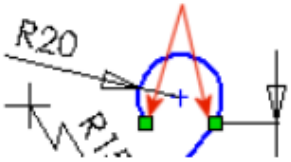

The Properties PropertyManager appears. The two endpoints are listed under **Selected Entities**.

14. Under Add Relations, click **Horizontal** .

15. Click . The dimensions and relations prevent the sweep path from changing size and shape when moved.

16. Click **Display/Delete** Relations on the Sketch toolbar. The Sketch Relations PropertyManager lists all the relations in the current sketch, including both relations that are added automatically as you sketch and relations that you add manually. For example, the coincident relation between the sweep path and the

revolved base was added automatically. You control the type of relation you want to see with the **Filter** option.

17. In the PropertyManager, under Relations, select **All in this sketch** in Filter.

18. Select each relation in **Relations**. As you select each relation, its entities are highlighted in the graphics area.

19. Click ✓.

20. Dimension the distance between the horizontal line of the sweep path and the bottom edge of the revolved feature to 10.

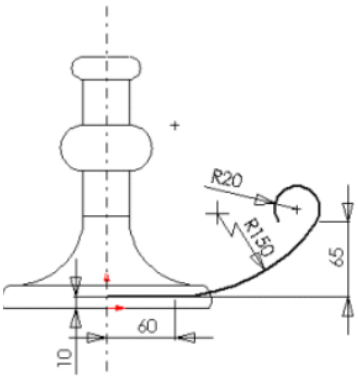

The sweep path is fully defined.

21. Click **Exit Sketch** on the Sketch toolbar.

Step 3. Sketching the Sweep Section

1. Select the Right plane in the FeatureManager design tree, then click **Sketch** on the Sketch toolbar to open a new sketch.

2. Click **Normal To** on the Standard Views toolbar.

3. Click **Ellipse** on the Sketch toolbar, then sketch an ellipse anywhere in the graphics area.

4. Click **Select** on the Standard toolbar, then hold down Ctrl and click the endpoints of the ellipse as shown.

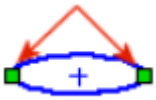

5. In the PropertyManager, under Add Relations, click **Horizontal**, then click **OK** ✓. This relation ensures that the ellipse is not slanted.

6. Dimension the ellipse as shown.

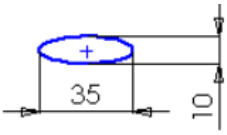

7. Click **OK** ✓.

8. Click **Isometric** on the Standard Views toolbar

9. Hold down **Ctrl** and click the center point of the ellipse and the endpoint of the horizontal line of the sweep path.

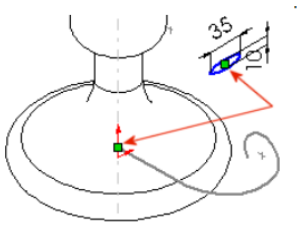

10. In the PropertyManager, under Add Relations, click Coincident, then click OK.

11. Click **View > Temporary Axes** to hide the temporary axis.

12. Click **Exit Sketch** on the Sketch toolbar.

Step 4. Creating the Sweep

1. Click **Swept Boss/Base** on the Features toolbar.
2. In the PropertyManager:
   a. Select Sketch3 (the ellipse) in the graphics area for **Profile**.
   b. Select Sketch2 (the path) in the graphics area for **Path**.

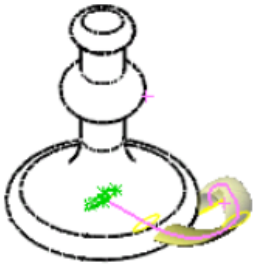

A preview of the sweep appears in the graphics area. Note how the colors in Profile and Path match those in the graphics area.

3. Under Options, select **Follow Path** in Orientation/twist type.
4. Click **OK** to create the sweep.
5. Click **Shaded with Edges** (View toolbar).

The candlestick's handle is complete.

6. Save the part.
7. Select the top face of the revolved base feature, then click **Extruded Cut** on the Features toolbar.
8. Click **Normal To** on the Standard Views toolbar.
9. Click **Circle** on the Sketch toolbar, and select the sketch origin. Sketch and dimension a circle as shown.

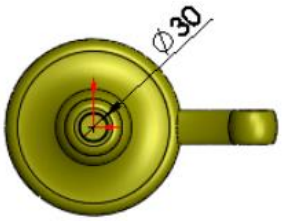

10. Click **Exit Sketch** on the Sketch toolbar.
11. Click **Isometric** (Standard Views toolbar).
12. In the PropertyManager, under Direction 1:
    a. Select **Blind in End Condition**.

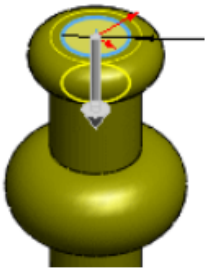

    b. Set **Depth** to 25.
    c. Click **Draft On/Off** , and set Draft Angle to 15.
13. Click . The cut is added to the top of the candlestick.

Tasks for Lesson 2

Total hours ow work: 90 min.

To create a three-dimensional models (Parts) for step column die block (Fig.3), die bushing block (Fig.4), shank (Fig.5) and screw (Fig.6) of a given variant. Save models.

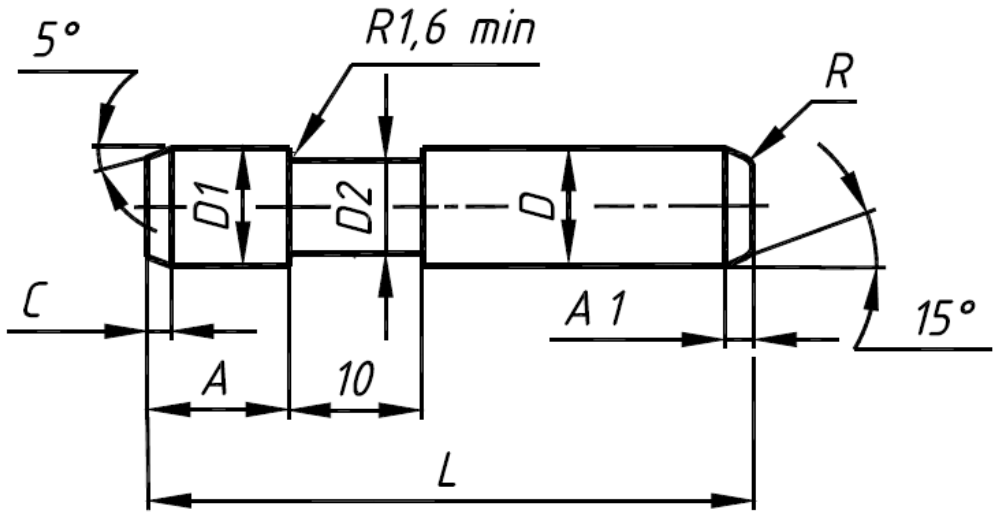

Fig. 3 – Step column die block

№ of var.	D	D1	D2	L	A	A1	R	C
1	25	25	24,4	150	40	8	3	2,5
2	25	25	24,4	160	40	9	2,5	2,5
3	32	32	31,4	190	45	8	3	3,5
4	32	32	31,4	185	45	9	2,5	4
5	32	32	31,4	180	45	8	3	3,5
6	32	32	31,4	170	45	9	2,5	4
7	32	32	31,4	190	50	8	3	3,5
8	32	32	31,4	210	50	9	2,5	4
9	32	32	31,4	195	50	8	3	3,5
10	32	32	31,4	170	45	9	2,5	4
11	32	32	31,4	185	50	8	3	3,5
12	32	32	31,4	210	50	9	2,5	4
13	32	32	31,4	216	56	8	3	3,5
14	32	32	31,4	208	56	9	2,5	4
15	32	32	31,4	200	56	8	3	3,5
16	32	32	31,4	210	56	9	3,5	4
17	32	32	31,4	220	56	8	3	3,5
18	40	40	39,4	200	56	9	3,5	4
19	40	40	39,4	220	56	8	3	3,5
20	40	40	39,4	240	56	9	3,5	4

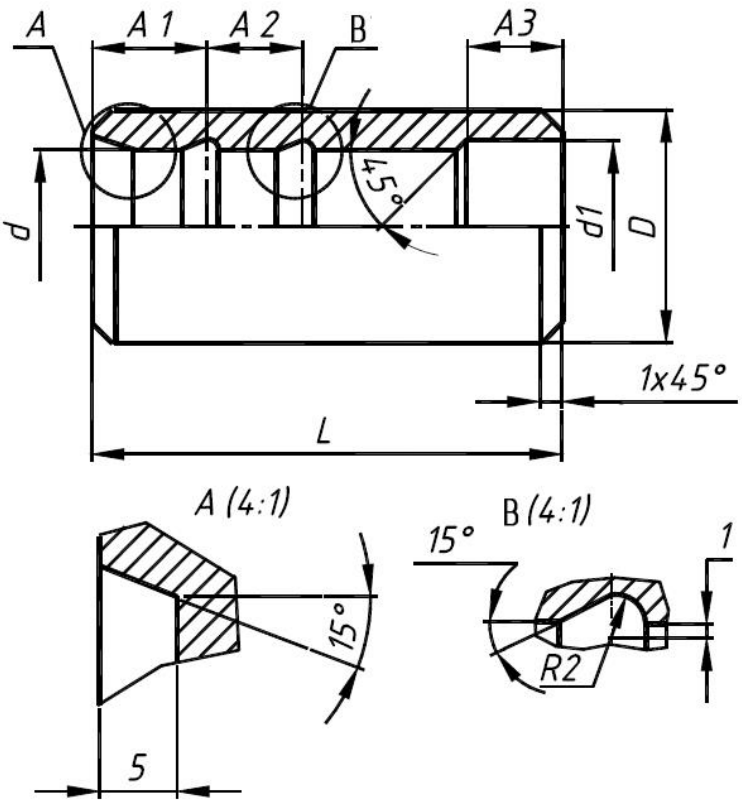

Fig. 4 – Die bushing block

№ of var.	d	d1	D	L	A3	A1	A2
1	25	26	38	75	34	12	25
2	25	26	38	80	34	12	25
3	32	33	45	95	42	16	32
4	32	33	45	100	42	16	32
5	32	33	45	103	42	16	32
6	32	33	45	99	42	16	32
7	32	33	45	101	42	16	32
8	32	33	45	102	42	16	32
9	32	33	45	104	42	16	32
10	32	33	45	107	42	16	32
11	32	33	45	106	42	16	32
12	32	33	45	109	42	16	32
13	32	33	45	101	47	16	25
14	32	33	45	103	47	16	25
15	32	33	45	105	47	16	25
16	32	33	45	107	47	16	25
17	32	33	45	109	47	16	25
18	40	41	56	110	52	16	28
19	40	41	56	111	52	16	28
20	40	41	56	113	52	16	28

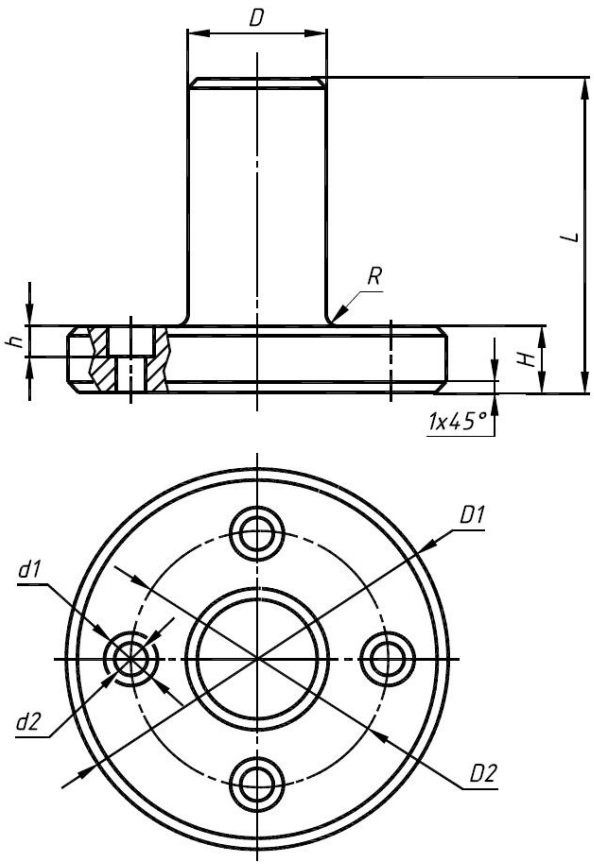

Fig. 5 – Shank

№ of var.	D	D1	D2	R	d1	d2	L	H	h
1	20	50	35	1	8	5,5	40	10	5
2	22	53	38	1	8	5,5	43	10	5
3	24	55	40	1	8	5,5	45	10	5
4	25	58	43	1	9	5,5	48	11	6
5	27	60	45	1	9	5,5	50	11	6
6	29	63	48	1	9	5,5	52	12	6
7	30	66	51	1	9	5,5	53	12	6
8	32	68	53	1	11	6,5	56	13	7
9	33	70	55	2	11	6,5	58	13	7
10	35	73	58	2	11	6,5	60	13	7
11	37	75	60	2	11	6,5	62	14	7
12	40	78	63	2	14	8,5	64	14	9
13	42	80	65	2	14	8,5	66	14	9
14	44	82	67	2	14	8,5	68	15	9
15	46	85	70	2	14	8,5	70	15	9
16	48	87	72	2	14	8,5	73	15	9
17	50	90	75	3	14	8,5	75	15	9
18	55	92	77	3	14	8,5	77	16	9
19	57	95	80	3	14	8,5	80	16	9
20	59	98	83	3	14	8,5	82	16	9

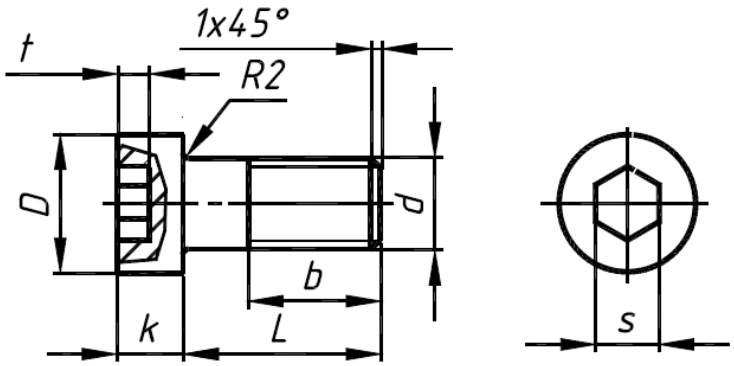

Fig. 6 – Screw

№ of var.	**D**	**k**	**L**	**d**	**S**	**t**	**b**
1-3	7	4	20	M5	4	2,5	18
4-7	8,5	5	20	M5	4	3	18
8-11	10	6	25	M6	5	3	18
12-20	13	8	25	M8	6	4	22

Lesson 3. Assemblies

Hours of work: 60 min.

If *Part1.sldprt* and *Part2.sldprt* is not open, click **Open** (Standard toolbar) and open the parts you created (from Lesson 1).

Step 1. Creating the Assembly

1. Click **New** on the Standard toolbar, click **Assembly**, then click **OK**. The Begin Assembly PropertyManager appears.

2. Under **Part/Assembly to Insert**, select *Part1*. A preview of *Part1* appears in the graphics area, and the pointer changes to .

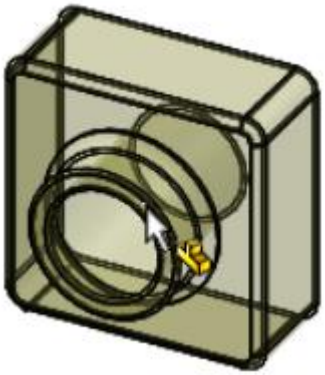

3. Click **Keep Visible** in the PropertyManager, so you can insert more than one component without having to re-open the PropertyManager.

4. Click anywhere in the graphics area to place *Part1*.

5. In the PropertyManager under **Part/Assembly to Insert**, select *Part2*.

6. Click in the graphics area to place *Part2* beside *Part1*.

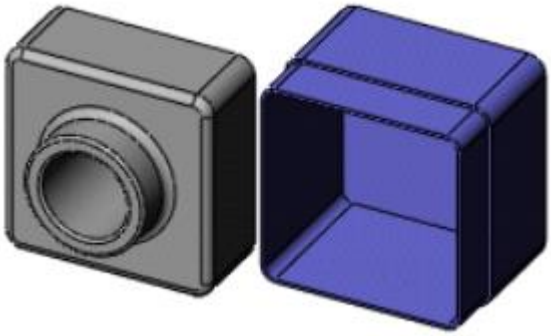

7. Click .

8. If necessary, click **Zoom to Fit**.

9. Save the assembly as Assy. (The .sldasm extension is added to the file name.) If you see messages about rebuilding the assembly and saving referenced documents, click **Save All** and **Rebuild** and save the document.

Step 2. Mating the Components

1. Click **Mate** (Assembly toolbar). The Mate PropertyManager appears.

2. In the graphics area, select the top edge of *Part1*, then select the outside edge of the lip on the top of *Part2*.

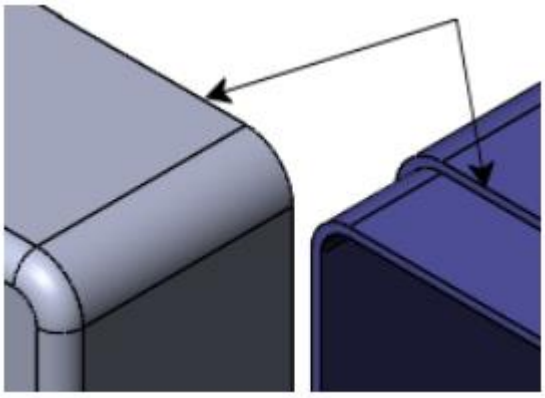

The **Mate** pop-up toolbar appears, and the components move into place, previewing the mate. In the PropertyManager, under **Mate Selections**, the edges are listed in **Entities to Mate** .

3. On the Mate pop-up toolbar:

a. Click **Coincident** as the mate type.

b. Click **Add/Finish Mate** .

A coincident mate appears under **Mates** in the PropertyManager.

4. Test degrees of freedom by moving the components:

a. In the graphics area, select the *Part2* component and hold down the left mouse button.

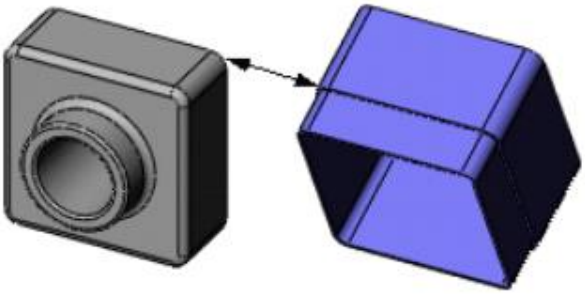

b. Drag the component from side to side to observe the available degrees of freedom.

5. Select the rightmost face of one component, then select the corresponding face on the other component.

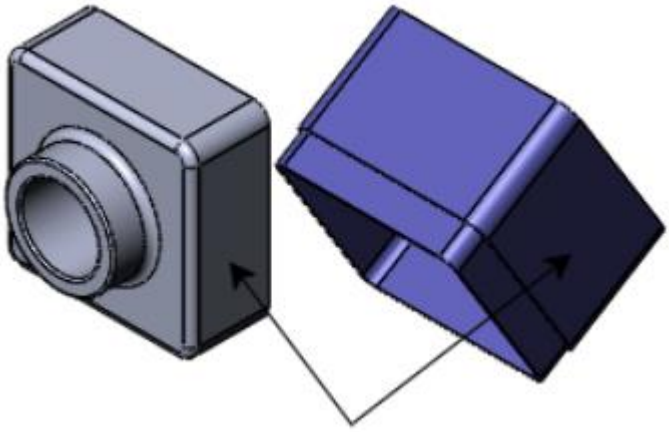

6. On the Mate pop-up toolbar, click **Coincident**, then click **Add/Finish Mate**. Another coincident mate appears under Mates in the PropertyManager.

7. Repeat steps 5 and 6, but select the top faces of both components, to add another coincident mate.

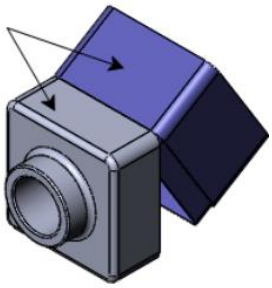

8. Click **OK**.

9. Save the assembly

Step 3. Using Display States

You can change the display settings of the components and save the settings in a display state.

1. At the top of the FeatureManager design tree, to the right of the tabs, click **Show Display Pane**. The Display Pane shows the different display settings (appearances, transparency, etc.) of each component.

2. Right-click anywhere in the Display Pane and select **Add Display State**.

3. Type a name and press **Enter**.

4. Move the pointer over *Part2* in the FeatureManager design tree, then:

a. Move the pointer into the **Display Mode** column.

b. When the pointer changes to , click, then select **Hidden Lines Visible** .

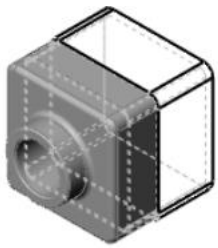

5. Click **Hide Display Pane**.

6. Right-click and select **Default_Display State-1**. The assembly returns to its original display state.

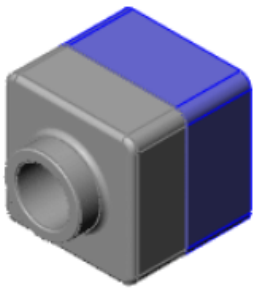

Tasks for Lesson 3

Hours of work: 75 min.

To create a three-dimensional model (Assembly) for die block using models from tasks for lessons 1 and 2. Save model.

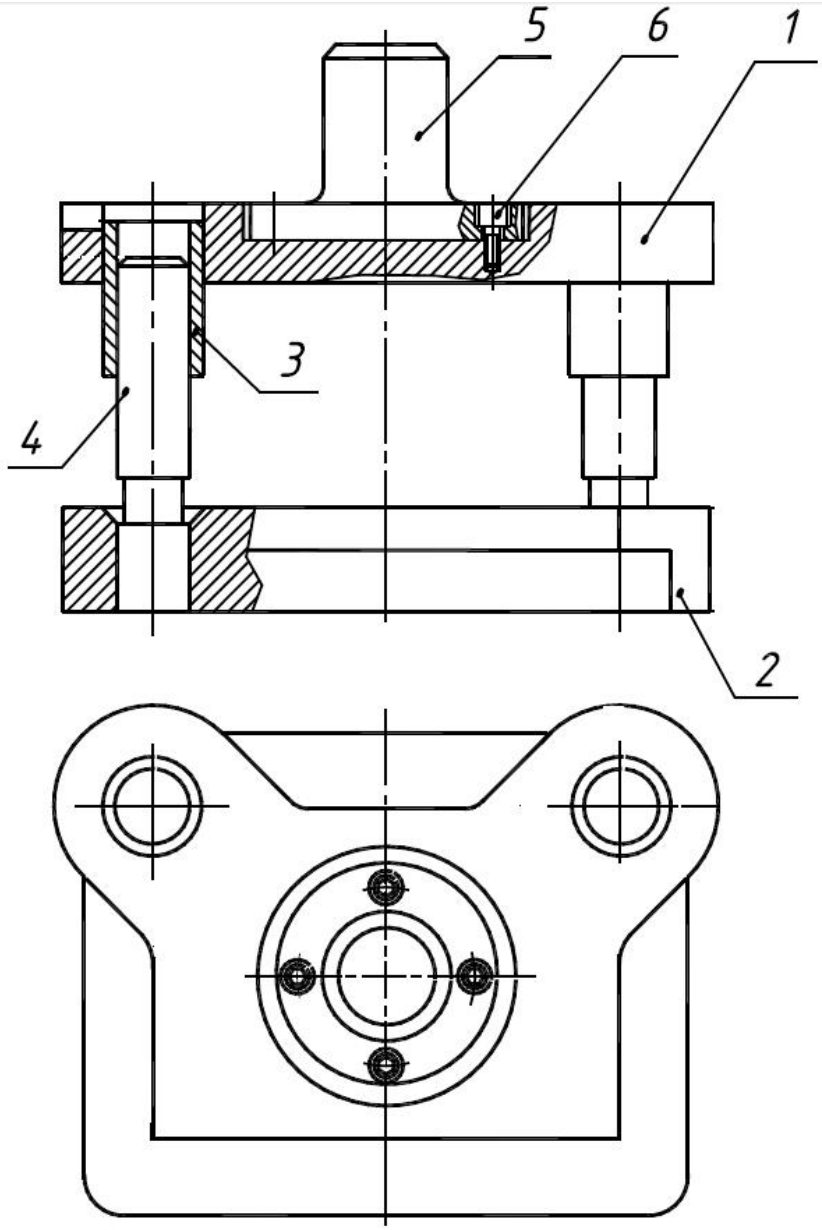

Fig. 7 – Die block: 1 - upper platen, 2 - lower platen, 3 - bushing, 4 - column, 5 - shank, 6 - screw

Bibliography

1. Solidworks Tutorials/ Dassault Systemes - SolidWorks Corporation, 2010 [Электронный ресурс] - 2014

2. Student’s Guide to Learning SolidWorks Software/ Dassault Systemes - SolidWorks Corporation, 2010 [Электронный ресурс] – 2010

3. Introducing SolidWorks/ Dassault Systemes - SolidWorks Corporation, 2010 [Электронный ресурс] - 2014